Trio GENERATOR

Cummins

MADE IN TURKEY

DATAKOM

D-500-LITE

INTERNET ENABLED GENSET CONTROLLER

International Organization for Standardization ISO 14001:2015

ISO 9001

CE

OUTPUT VALUES

Standby Power	Voltage	230/400
Standby Power	kVA	440
Standby Power	kW	352
Standby Power	Amper	633
Prime Power	Voltage	230/400
Prime Power	kVA	400

Prime Power	kW	320
Prime Power	Amper	576

DIESEL ENGINE

Brand	CUMMINS
Model	QSG12G2
Max. Total Output Pow. (kWm/hp)	367/492
Cylinder Displacement (lt)	13
Cylinder Orientation	6 Single Line
Bore x Stroke(mm*mm)	130 X 163
Compression Ratio	17:1
Governor Type	Electronic
Rotation	1500 RPM
Aspiration System	Natural
Injection	Direct
Cooling System	Water Cooled
Electrical System(V DC)	24
Oil Capacity (lt)	61
Engine Coolant Capacity (lt)	23
Fuel Cons. %50 (lt/h)	52
Fuel Cons. %75 (lt/h)	72
Fuel Cons. %100 (lt/h)	89

ALTERNATOR

Standby Power (kVa/kw)	440/352
Prime Power (kVa/kw)	400/320
Brand	LEROY SOMER
Output Voltage (V)	231/400
Frequency (Hz)	50
Stationary Vol. Regulation(±)	0,01
Short Circuit Current	%300 (10 sec)
Insulation	H
Protection	IP23
E ciency (%)	92
Overloading	110% for 1 hour
Power Factor (cos Q=0.8)	0,8
Tot. Harmonic Dist. Rate	<1 %
Connection Type	Star
Number of Pole	4
Number of Bearing	Single

DIMENSIONS & WEIGHT

Without Canopy	Width	1500 mm
Without Canopy	Length	3500 mm
Without Canopy	High	2200 mm
Without Canopy	Weight	3350 kg
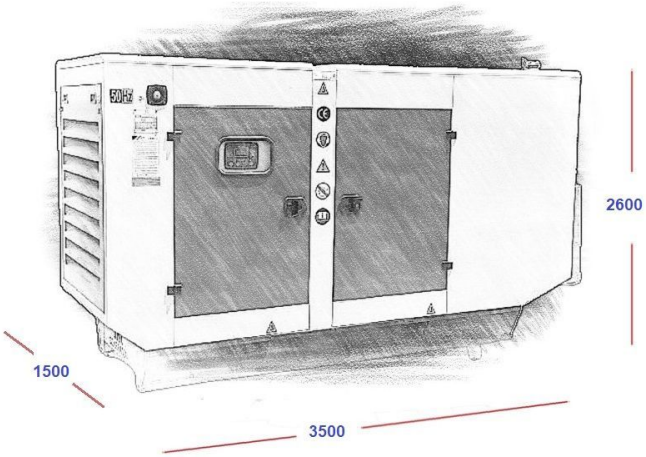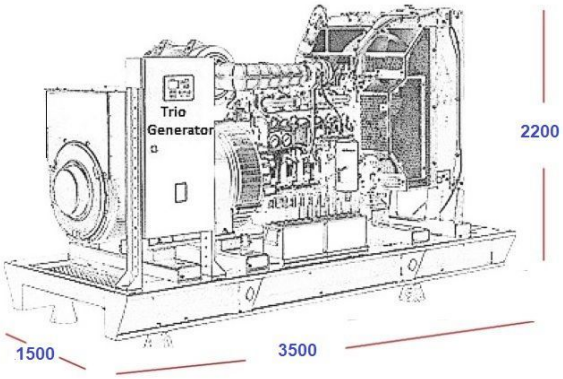
Without Canopy	Fuel Tank Capacity	660 lt
With Canopy	Width	1500 mm
With Canopy	Length	3500 mm
With Canopy	High	2600 mm
With Canopy	Weight	4350 kg
With Canopy	Fuel Tank Capacity	660 lt